Product data sheet
Characteristics

XPSMCMEN0200
Speed monitoring 2 Proximity sensor expansion module with screw term

Product availability: Non-Stock - Not normally stocked in distribution facility

Price*: 500.00 USD

Main

Range of product	Preventa Safety automation
Product or Component Type	Safe speed monitoring module
Device short name	XPSMCM
Electrical Connection	Screw terminal
[Us] rated supply voltage	24 V - 20...20 % DC
Discrete input voltage	24 V DC
Function of module	Speed monitoring

Complementary

Power Consumption in W	3 W
Power dissipation in W	3 W
Integrated connection type	Backplane expansion bus
Safety level	Can reach category 4 conforming to EN/ISO 13849-1 Can reach PL = e conforming to EN/ISO 13849-1 Type 4 EN/IEC 61496-1 SILCL 3 conforming to IEC 62061
Quality labels	CE
Number of terminal blocks	4
Local signalling	1 LED green with PWR marking for power ON 1 LED green with RUN marking for RUN (status) 1 LED red with E IN marking for internal error 1 LED red with E EX marking for external error 2 LEDs orange with ADDR marking for node address 2 LEDs yellow with PROX marking for proximity sensors connection status 2 LEDs yellow with SH marking for speed monitoring status
Connections - terminals	2 captive screw clamp terminals, removable terminal block 1 captive screw clamp terminals, removable terminal block
Maximum input frequency	5 KHz for sensor
Sensor Type	Inductive proximity sensor

The information provided in this documentation contains general descriptions and/or technical characteristics of the performance of the products contained herein.
This documentation is not intended as a substitute for and is not to be used for determining suitability or reliability of these products for specific user applications.
It is the duty of any such user or integrator to perform the appropriate and complete risk analysis, evaluation and testing of the products with respect to the relevant specific application or use thereof.
Neither Schneider Electric Industries SAS nor any of its affiliates or subsidiaries shall be responsible or liable for misuse of the information contained herein. *Prices are indicative

Cable cross section	0.00…0.00 In² (0.2…2.5 mm²) flexible without cable end 0.00…0.00 In² (0.2…2.5 mm²) solid without cable end 0.00…0.00 In² (0.25…2.5 mm²) flexible with cable end, with bezel 0.00…0.00 In² (0.25…2.5 mm²) flexible with cable end, without bezel 0.00…0.00 In² (0.2…1.5 mm²) flexible without cable end 0.00…0.00 In² (0.25…1 mm²) flexible with cable end, without bezel 0.00…0.00 In² (0.5…1.5 mm²) flexible with cable end, with double bezel 0.00…0.00 In² (0.2…1 mm²) solid without cable end
Mounting support	Omega 35 mm DIN rail conforming to EN 50022
Depth	0.89 In (22.5 mm)
Height	3.90 In (99 mm)
Width	4.51 In (114.5 mm)
Product Weight	0.51 Lb(US) (0.23 kg)

Environment

Standards	IEC 62061 EN/IEC 61800-5-1 EN/IEC 61496-1 EN/ISO 13849-1 EN/IEC 61508
Product Certifications	CULus TÜV RCM
IP degree of protection	IP20 (enclosure)
Ambient air temperature for operation	14…131 °F (-10…55 °C)
Ambient air temperature for storage	-4…185 °F (-20…85 °C)
Relative Humidity	10…95 %
Pollution degree	2
[Uimp] rated impulse withstand voltage	4 KV EN/IEC 61800-5
Insulation	250 V AC between power supply and housing EN/IEC 61800-5-1
Overvoltage category	II
Electromagnetic compatibility	Electrostatic discharge immunity test - test level: 6 kV (on contact) conforming-to EN/IEC 61000-4-2 Electrostatic discharge immunity test - test level: 20 kV (on air) conforming-to EN/IEC 61000-4-2 Susceptibility to electromagnetic fields - test level: 10 V/m (80...1000 MHz) conforming to EN/IEC 61000-4-3 Susceptibility to electromagnetic fields - test level: 30 V/m (1.4 GHz...2 GHz) conforming to EN/IEC 61000-4-3
Vibration resistance	+/-0.35 mm 10…55 Hz)EN/IEC 61496-1
Shock resistance	10 gn 16 ms) 1000 shocks on each axis EN/IEC 61496-1
Service Life	20 Year(S)

Ordering and shipping details

Category	22477 - SAFETY MODULES (PREVENTA)
Discount Schedule	SAF2
GTIN	03606480748912
Nbr. of units in pkg.	1
Package weight(Lbs)	7.62 Oz (216 g)
Returnability	No
Country of origin	IT

Packing Units

Unit Type of Package 1	PCE
Package 1 Height	1.81 In (4.6 cm)
Package 1 width	6.38 In (16.2 cm)
Package 1 Length	4.80 In (12.2 cm)
Unit Type of Package 2	S01

Number of Units in Package 2	6
Package 2 Weight	3.36 Lb(US) (1.522 kg)
Package 2 Height	5.91 In (15 cm)
Package 2 width	5.91 In (15 cm)
Package 2 Length	15.75 In (40 cm)

Offer Sustainability

Sustainable offer status	Green Premium product
California proposition 65	WARNING: This product can expose you to chemicals including: Lead and lead compounds, which is known to the State of California to cause cancer and birth defects or other reproductive harm. For more information go to www.P65Warnings.ca.gov
REACh Regulation	REACh Declaration
REACh free of SVHC	Yes
EU RoHS Directive	Pro-active compliance (Product out of EU RoHS legal scope) EU RoHS Declaration
Mercury free	Yes
RoHS exemption information	Yes
China RoHS Regulation	China RoHS Declaration
Environmental Disclosure	Product Environmental Profile
Circularity Profile	End Of Life Information
WEEE	The product must be disposed on European Union markets following specific waste collection and never end up in rubbish bins.
PVC free	Yes

XPSMCMEN0200

Dimensions

Screw Terminal

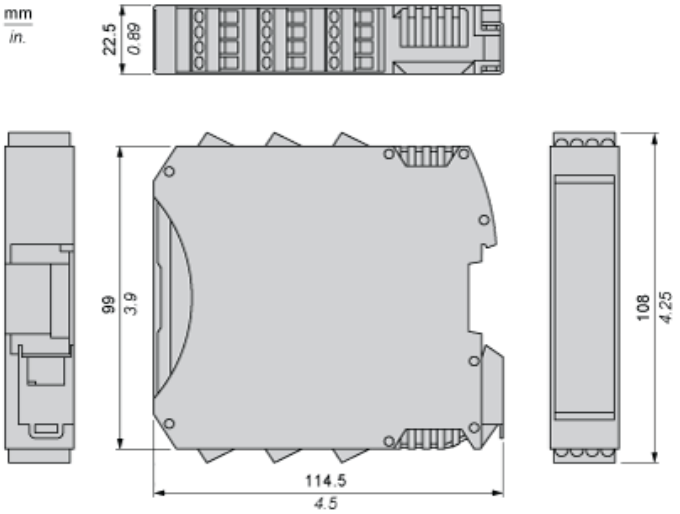

Mounting Safety Controller CPU with Module(s)

Mount BackPlane Connector on Rail

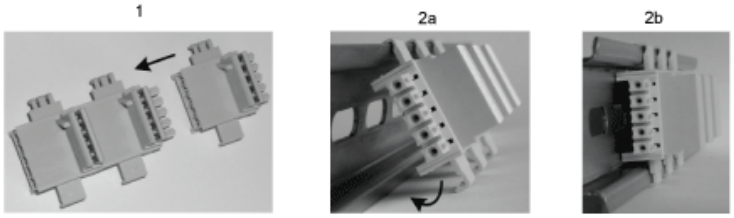

1 : Connect as much Backplane Connector as module to be install.
2 : Fix the connectors to the rail (Top first).

Mount Safety Controller CPU with Other Module(s)

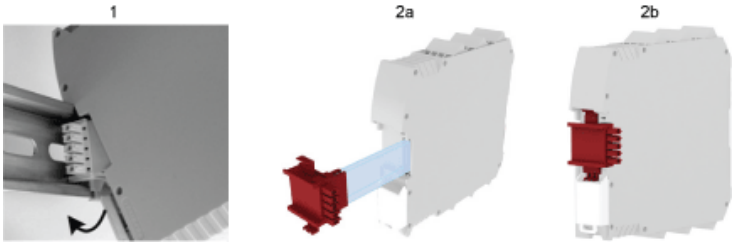

1 : Mount controller CPU and modules on rail.
2 : Make sure that the controller CPU or the module(s) are plugged on the BackPlane connector.

Wiring

Terminal Designation

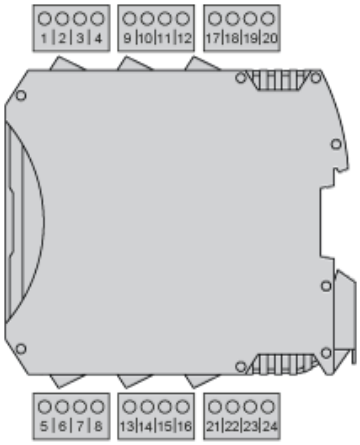

Terminal	Signal	Description
1	24 VDC	24 VDC power supply
2	NODE_ADDR0	Node selection
3	NODE_ADDR1	
4	0 VDC	0 Vdc power supply
5	PROXY1_24V	PROXIMITY 1 connections
6	PROXY1_REF	
7	PROXY1_NO	
8	PROXY1_NC	
9	PROXY2_24V	PROXIMITY 2 connections
10	PROXY2_REF	
11	PROXY2_NO	
12	PROXY2_NC	
13	not connected	not connected
14		
15		
16		

Product Life Status : Commercialised